LASER ENGRAVE

▨ **Laser Engraves Silver**

F.P.O

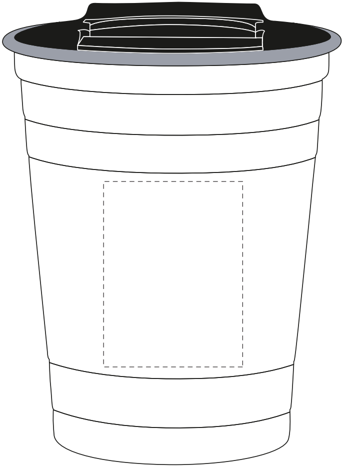

Dashed Line For Imprint Area Only, Will Not Print.

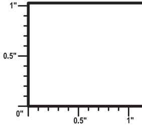

	Artist/Date:	Item # : 5750	Proofing:
	Order #:	Imprint Size : 1.5" W x 2" H	
	Ship Date:		
	Imprint Color:	Imprint Type : LASER	
	Item Color:		

STANDARD SILK-SCREEN

1 Sided imprint

F.P.O

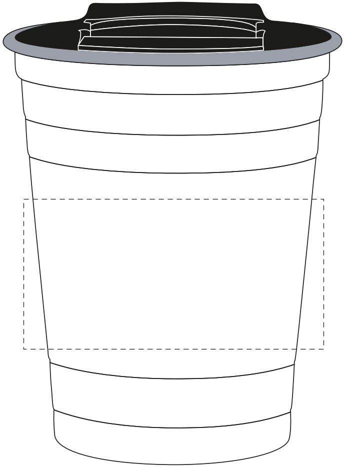

Dashed Line For Imprint Area Only, Will Not Print.

DTS	Artist/Date: Order #: Ship Date: Imprint Color: Item Color:	Item # : 5750 Imprint Size : 3" W x 1 ½" H Wraparound: 6" W x 1 ½" H Imprint Type : Standard Silk-Screen	Proofing:

2 Sided Imprint

Dashed Line For Imprint Area Only, Will Not Print.

1"
0.5"
0"
0.5"
1"

DTS

Artist/Date:
Order #:
Ship Date:
Imprint Color:
Item Color:

Item # : 5750
Imprint Size : 3" W x 1 ½" H
Wraparound: 6" W x 1 ½" H
Imprint Type : Standard Silk-Screen

Proofing:

2 Sided Imprint

F.P.O

2 Sided Imprint

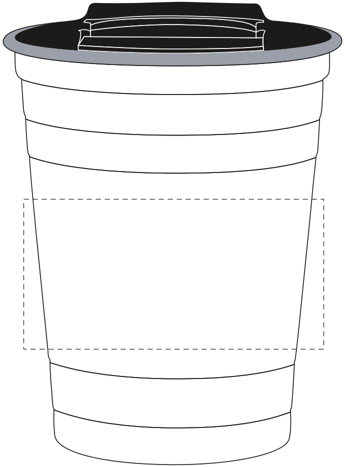

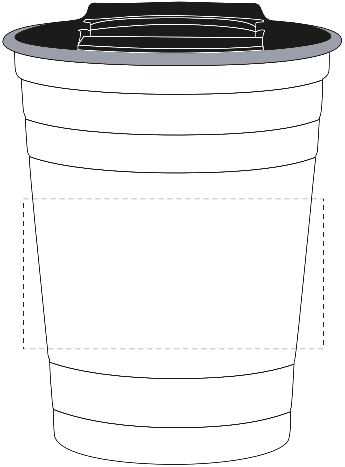

WRAPAROUND IMPRINT

Dashed Line For Imprint Area Only, Will Not Print.

1"
0.5"
0"
0.5"
1"

DTS

Artist/Date:
Order #:
Ship Date:
Imprint Color:
Item Color:

Item # : 5750
Imprint Size : 3" W x 1 ½" H
Wraparound: 6" W x 1 ½" H
Imprint Type : Standard Silk-Screen

Proofing:

WRAPAROUND IMPRINT

F.P.O

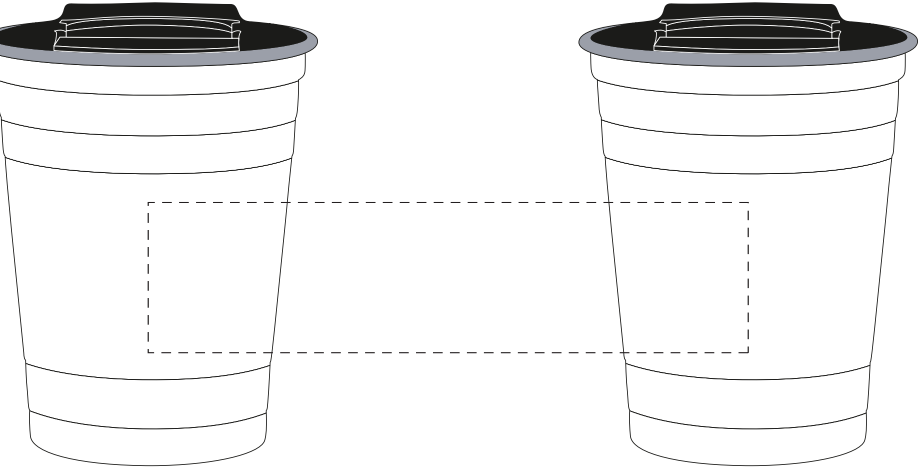WRAPAROUND IMPRINT